UBC

UNIVERSAL JOINTS
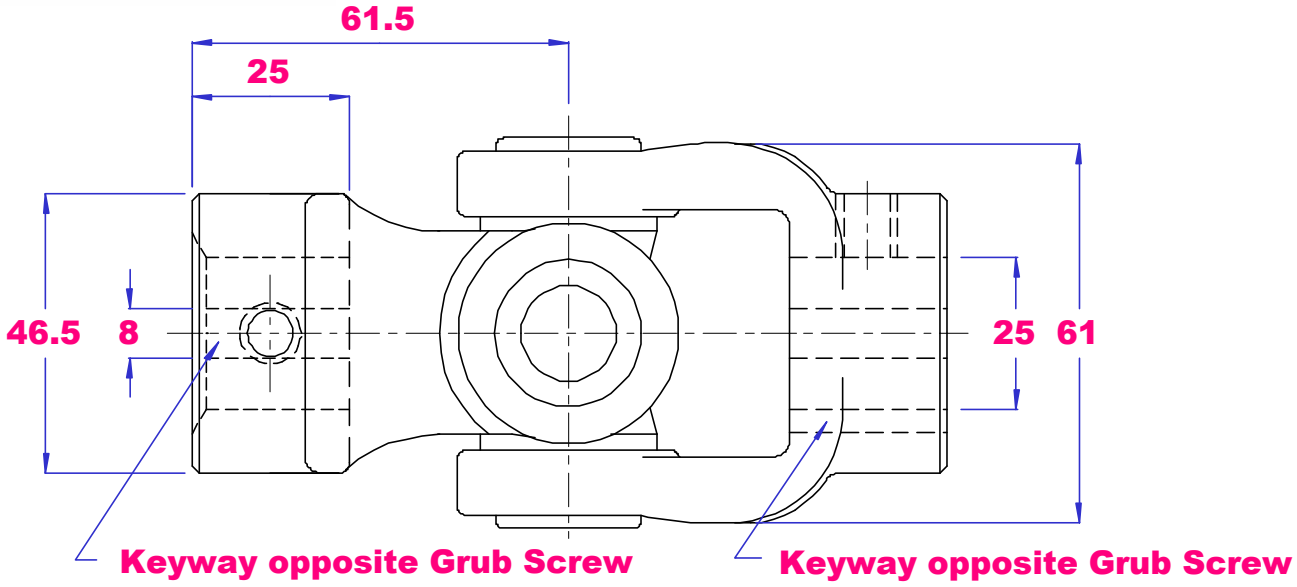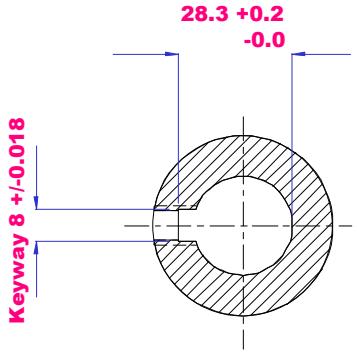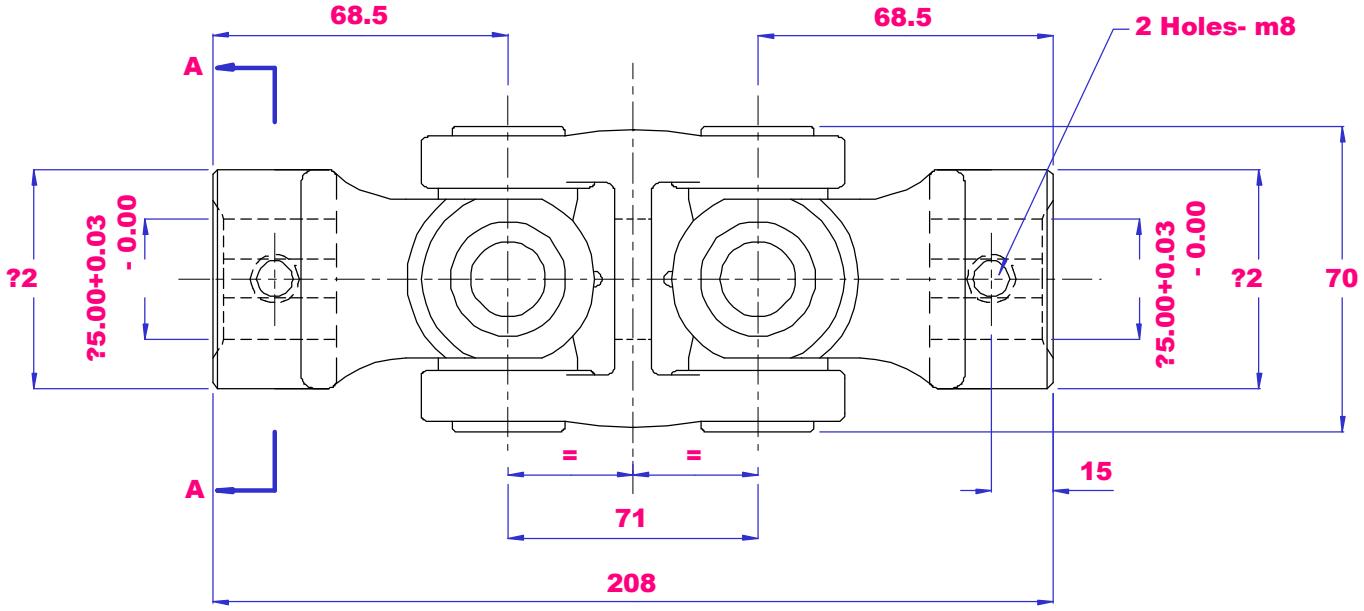
Quality Endorsed Company
ISO 9001:2000
LIC QEC20818